March 17, 2022

Diplomat-Z-Series
and customized PRO-Z-Bases

1. Choose the best place, where you would like to have the flag pole mounted.

2. Check if there are screws or wholes in your car, which you could use.
   If not, you have to make some whole for attaching Z-Bracket.

3. Measure angle and length of bevel for needed Z-Base.

Sample: 120° angle does fit best, and bevel length of at least 4cm, better 5cm would fit. If you have difficulties, please send us a photo like this by email.

4. Check if chosen Z-Base will fit

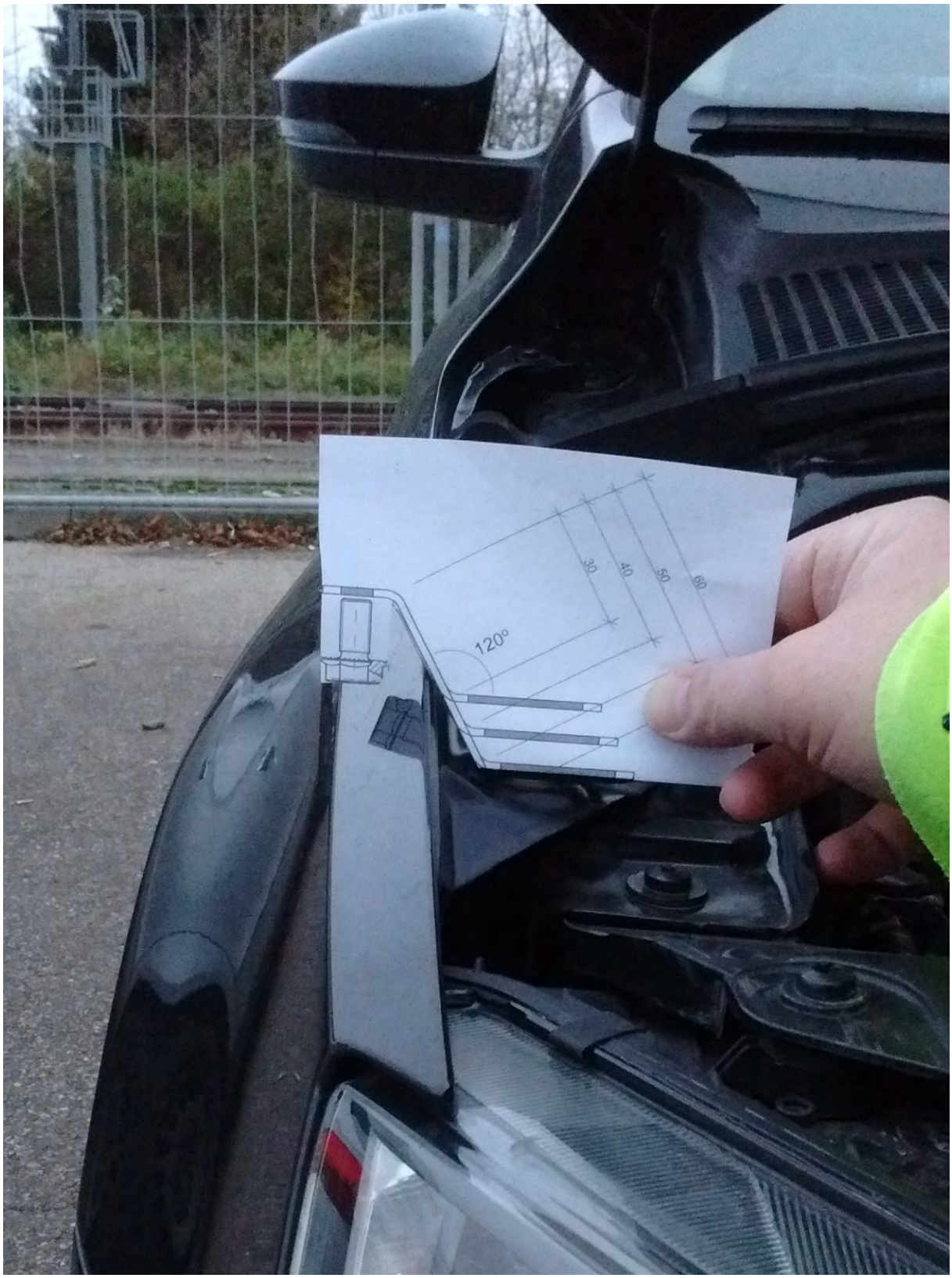

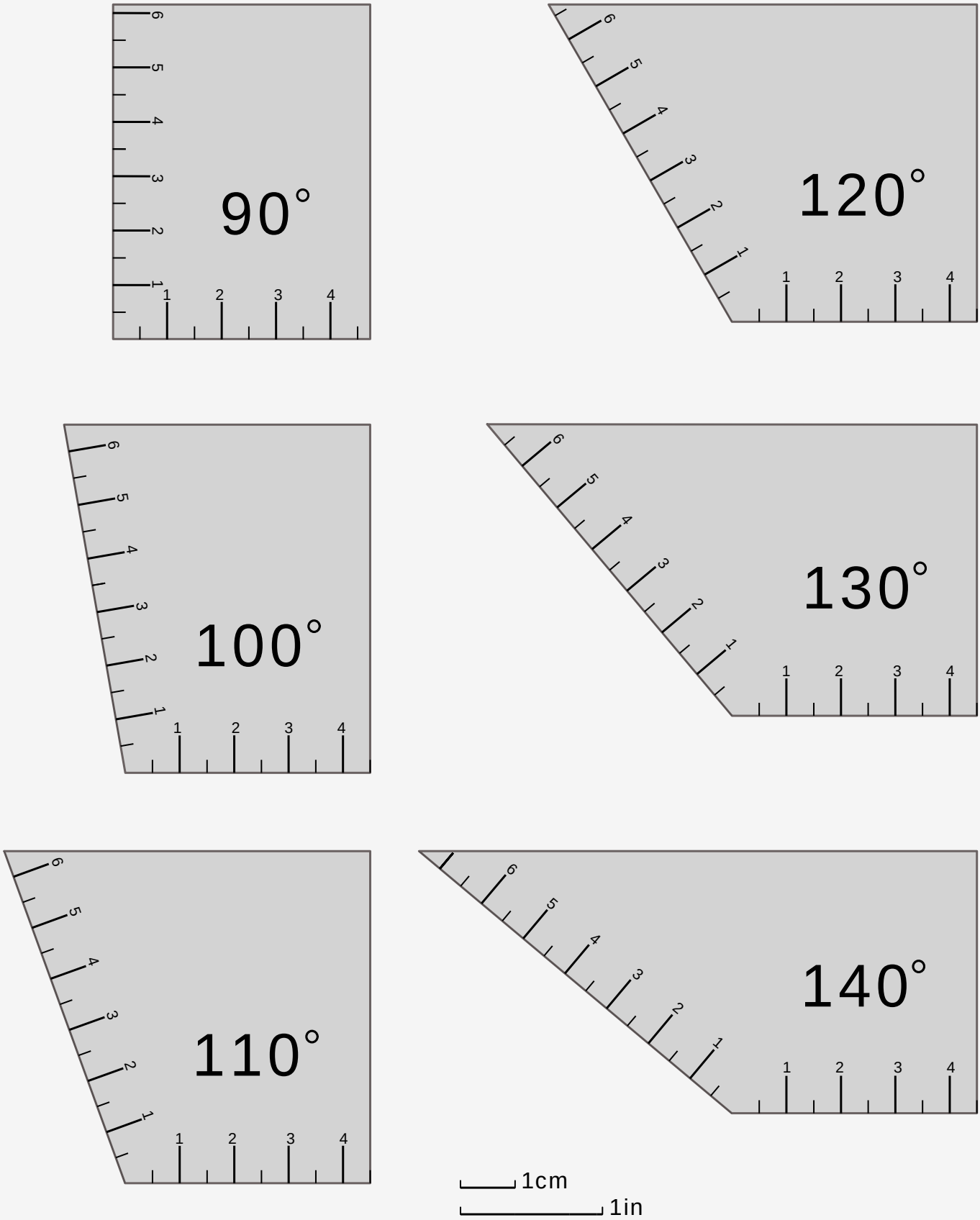
90°
120°
100°
130°
110°
140°
1cm
1in

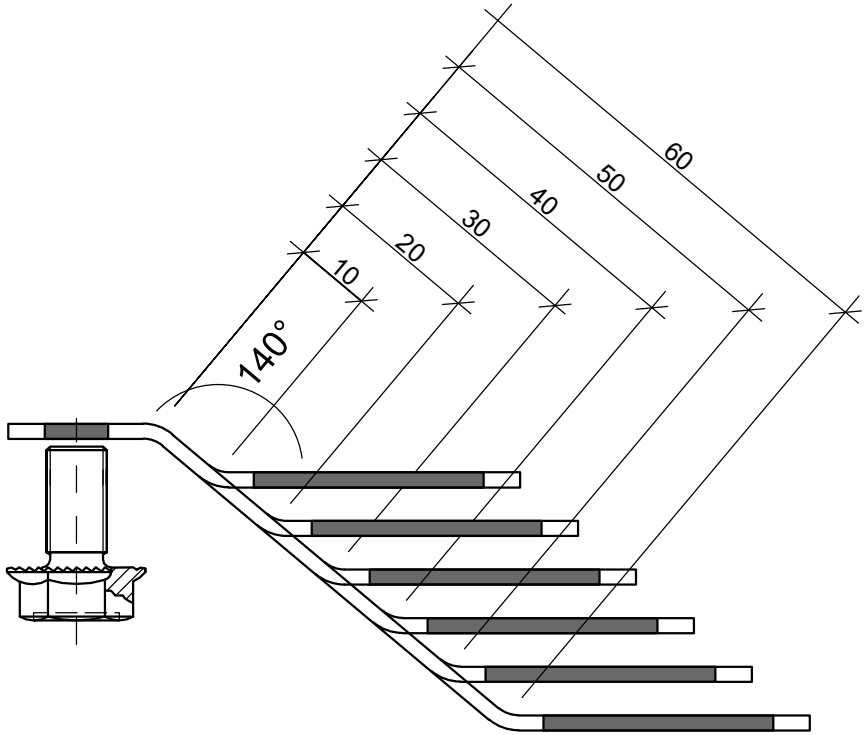
140°
10
20
30
40
50
60

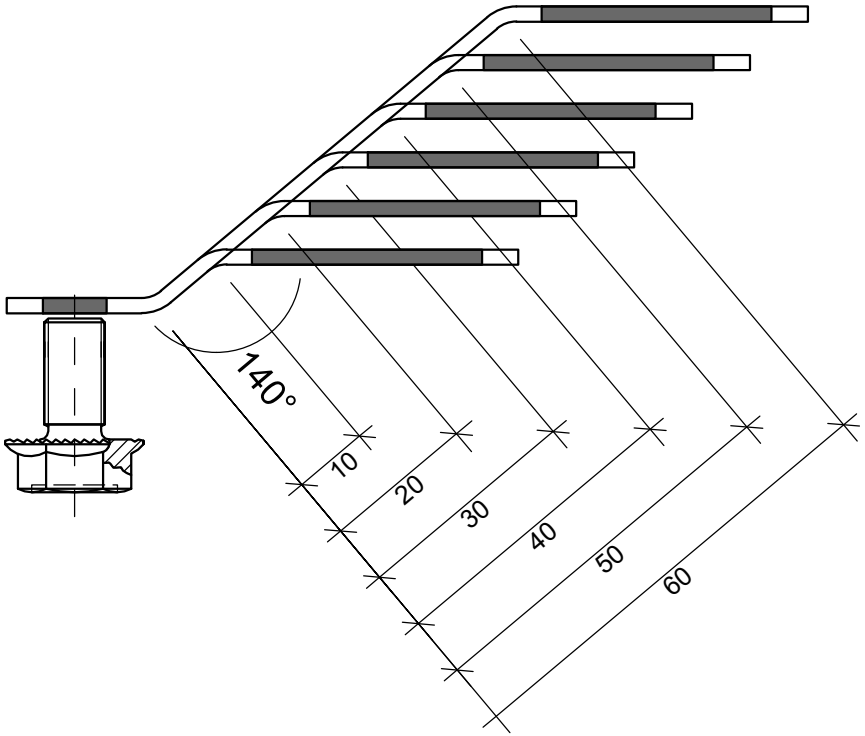
140°
10
20
30
40
50
60

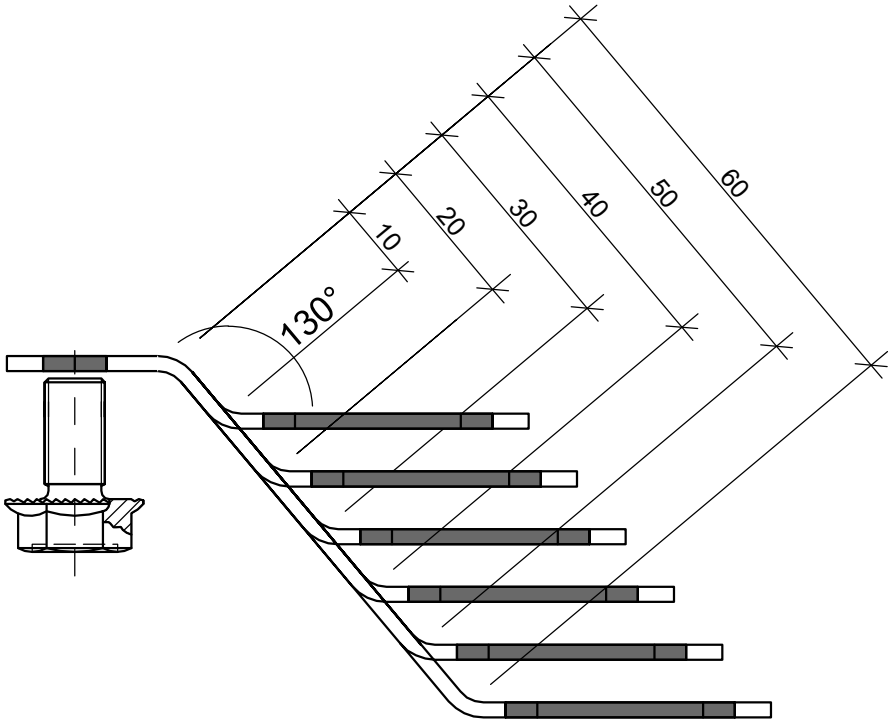
130°
10
20
30
40
50
60

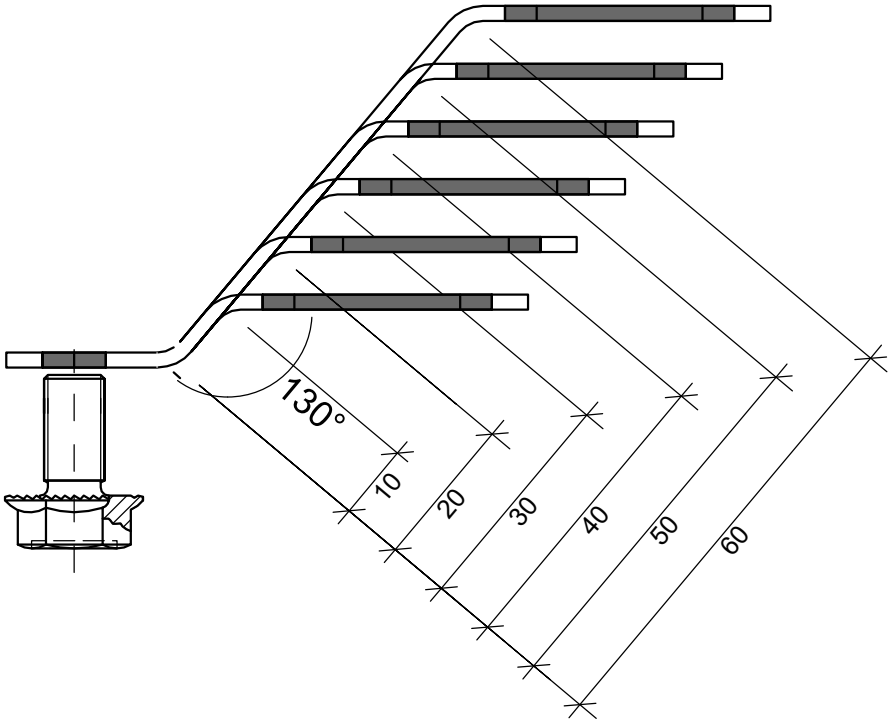
130°
10
20
30
40
50
60

120°
10
20
30
40
50
60

120°
10
20
30
40
50
60

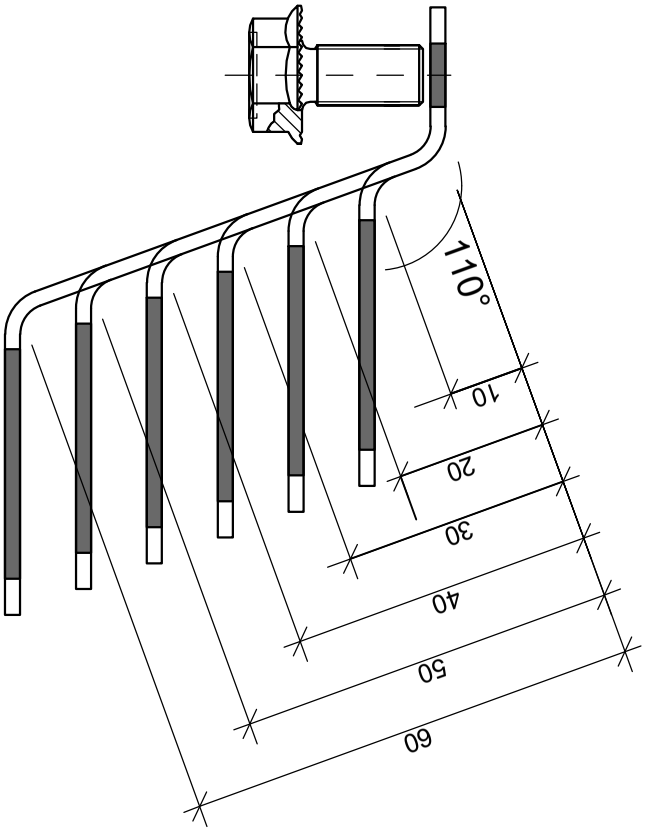
110°
10
20
30
40
50
60

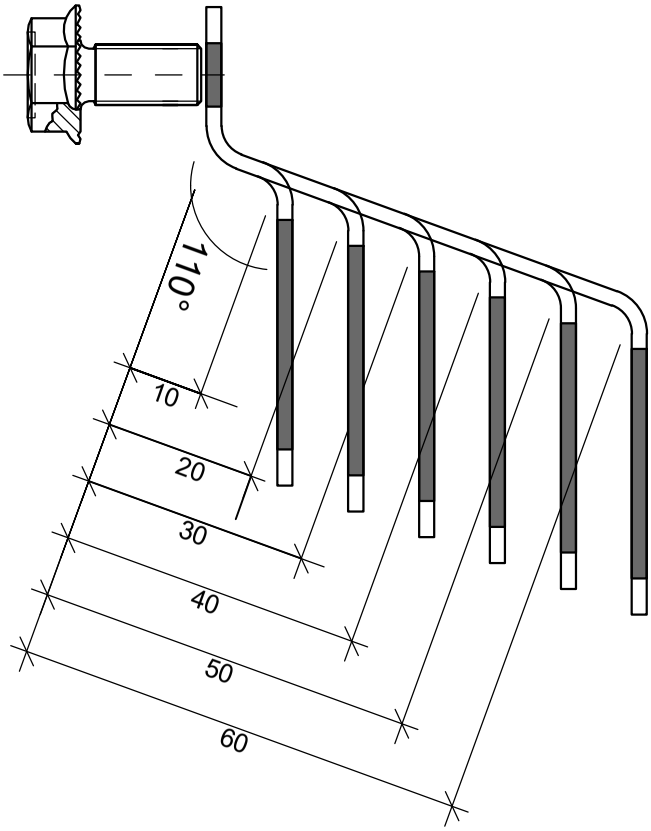
110°
10
20
30
40
50
60

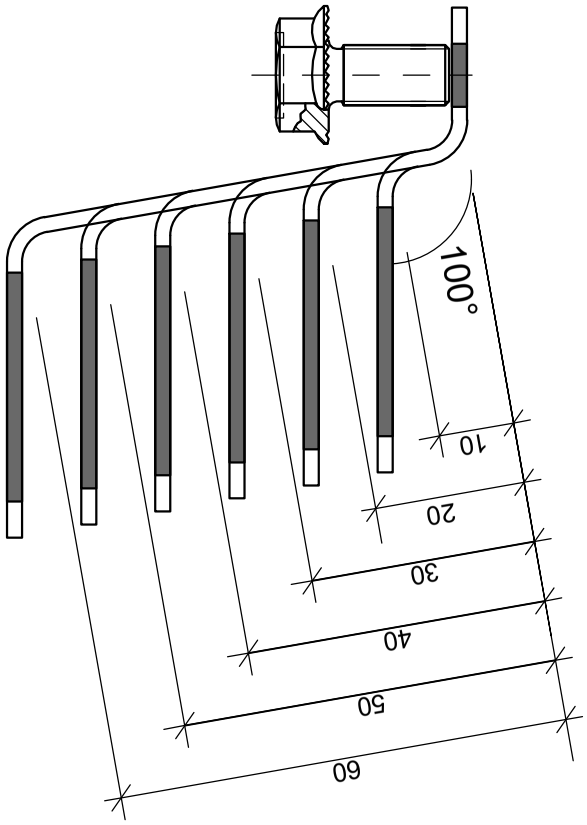
100°
10
20
30
40
50
60

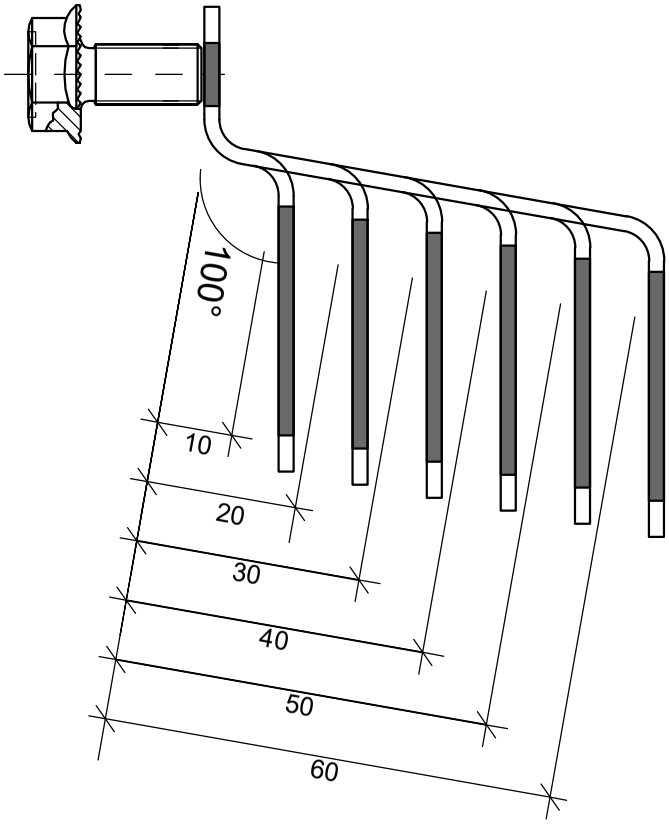
100°
10
20
30
40
50
60

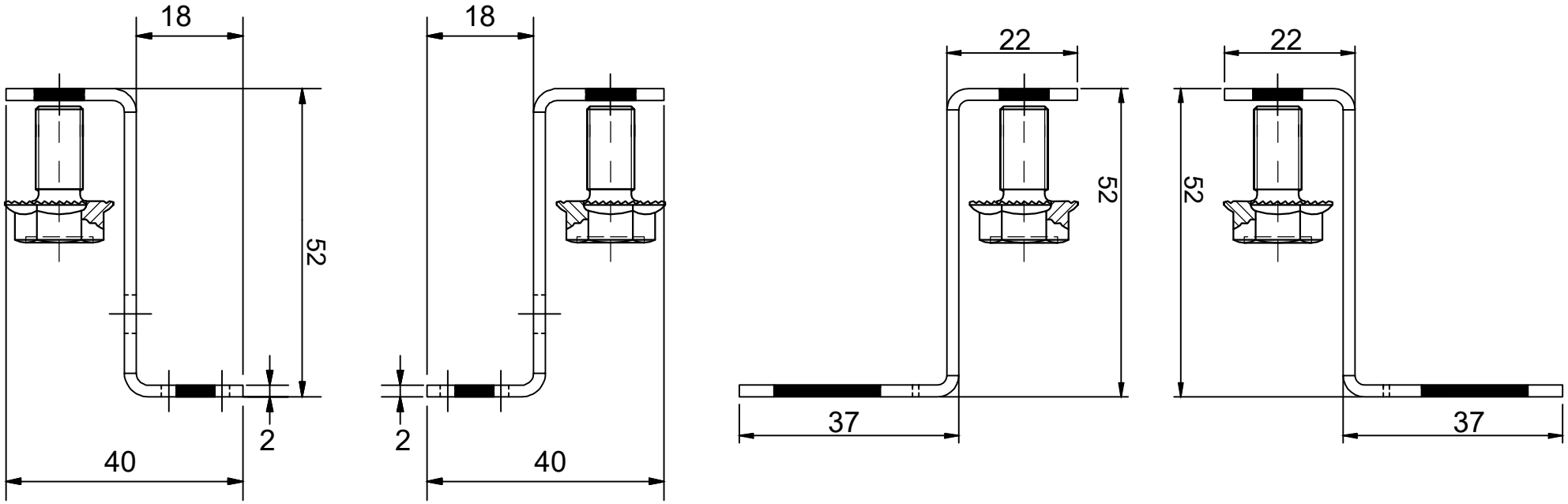
18
52
2
40
18
2
40
22
52
37
22
52
37